www.classicmachinery.net

Install king pin mounting cap screws finger tight, complete installation of final drive assembly, then adjust king pin bearing preload as follows:

Remove grease fitting or plug and mounting cap screws from upper king pin. Install special plate ACTP-3080 (1—Fig. 8) on upper king pin, install king pin cap screws (2) and tighten to 47 ft.-lbs. (64 N · m) torque. Use a torque wrench (3) to measure torque required to turn planetary unit. Specified torque is 58-72 ft.-lbs. (79-97 N · m) torque. To increase torque reading, decrease thickness of shims (2—Fig. 6) on lower king pin. To decrease torque reading increase shim thickness. Shims should only be installed on lower king pin. Remove special plate from upper king pin, reinstall mounting cap screws and tighten to 47-ft.-lbs. (64 N · m) torque.

Refill final drive housing and axle housing to correct levels with Allis-Chalmers Power Fluid 821 or equivalent.

Fig. 8—Install special plate ACTP-3080 (1) on upper king pin, then use a torque wrench (3) to measure torque required to turn planetary unit. Install shims on lower king pin only to adjust king pin bearing preload.

DIFFERENTIAL AND BEVEL GEAR HOUSING

All Models So Equipped

10. **R&R OVERHAUL.** Axle assembly must be removed from tractor as outlined in paragraph 7 to remove differential assembly. Planetary assemblies can be removed as complete units if disassembly is not necessary. Remove drain plugs and drain oil from final drive housings and axle housing. Support planetary assembly with an overhead hoist, remove king pins and separate complete planetary unit from axle housing. Loosen axle bearing retainer screws (7—Fig. 4), then pull axle shaft assemblies from axle housing. Remove cap screws retaining differential carrier housing (11), then remove carrier with differential assembly from axle housing.

Block teeth of pinion gear and ring gear to prevent pinion shaft movement, then loosen pinion shaft locknut (1—Fig. 9), mark differential carrier bearing caps to carrier housing so they can be reinstalled in their original positions. Remove bearing caps and adjusting rings (15). Lift differential and ring gear assembly from carrier housing.

Remove pinion shaft locknut, then press pinion shaft (10) assembly out of carrier housing. Drive seals and bearing cups from housing as necessary.

Remove ring gear mounting cap screws and separate ring gear (11) from differential case (12). Remove screw (13) retaining pinion gear shaft (18). Push shaft out of case and remove pinion gears (17), side gears (19) and thrust washers (16 and 20).

Inspect gears, bearings and thrust washers for wear or damage and renew if necessary. Running clearance of shaft in pinion gears should be 0.003-0.005 inch (0.08-0.12 mm). Thickness of pinion gear thrust washers is 0.058-0.060 inch (1.47-1.53 mm) when new. Side gear thrust washers are available in two thicknesses of 0.059 inch (1.5 mm) or 0.063 inch (1.6 mm) and are used to adjust side gear end clearance. Note that side gears and pinion gears and the bevel ring gear and pinion gear are available as complete gear sets only.

To check and adjust differential side gear (19) clearance, assemble side gears without thrust washers and pinion gears with thrust washers into differential case. Install pinion gear shaft and retaining screw. Use a depth micrometer (Fig. 10) to measure distance from edge of case to the end of one of the side gears with gear pushed inward against pinion gears and with gear pulled outward against case. Subtract measurement with gear held outward from measurement with gear held inward to determine side gear clearance, then subtract 0.010 inch (0.25 mm) from the clearance figure. The result is thickness of thrust washer (20—Fig. 9) that should be installed to provide desired end clearance of 0.010 inch (0.25 mm). Repeat the procedure for side gear on opposite side as different thickness washer may be required to provide desired end clearance for each gear.

Disassemble differential gears, then reassemble using correct thickness thrust washers. Peen head of pinion shaft retaining screw (13) to prevent loosening. Install ring gear (11) onto case (12) and tighten mounting cap screws evenly to 95-ft.-lbs. (129 N · m) torque.

Reinstall and adjust bevel pinion shaft (10) and differential assembly as outlined in paragraphs 11 through 14.

Install differential support housing into axle housing and tighten mounting cap screws to 83 ft.-lbs. (113 N · m) torque. Reinstall axle shafts and final drive units. Reinstall axle assembly under tractor. Refill axle housing and final drive housings to correct levels with Allis-Chalmers Power Fluid 821 or equivalent.

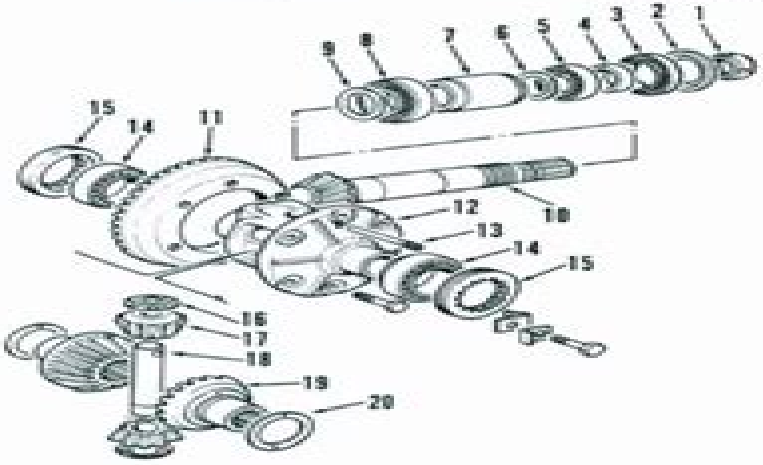

Fig. 9—Exploded view of front-wheel drive differential and bevel gear assemblies.

1. Nut
2. Dust seal
3. Oil seal
4. Spacer
5. Bearing
6. Shim
7. Spacer
8. Bearing
9. Shim
10. Bevel pinion
11. Bevel ring gear
12. Differential case
13. Retaining screw
14. Carrier bearings
15. Adjuster rings
16. Thrust washer
17. Pinion gear
18. Shaft
19. Side gear
20. Thrust washer

Fig. 10—Use a depth micrometer to measure distance from edge of case to end of side gear to determine thickness of thrust washer required to provide proper end clearance. Refer to text.

Allis Chalmers 6060 Manual

SJ Ball

Allis Chalmers 6060 Manual:

Allis Chalmers 6060 Operator Owners Manual ,1984-01-15 **Allis-Chalmers Shop Manual** ,1987

Allis-Chalmers Modelss 6060 6070 & 6080 Penton Staff,2000-05-24 Models 6060 6070 6080 **Litigation Manual Outline and Litigation Manual, 1956-1971** United States. National Labor Relations Board. Division of Litigation. Legal Research and Special Projects Branch,1972 **Power Farming in Australia and New Zealand Technical Manual** ,1987

Official Guide, Tractors and Farm Equipment ,1989 *Electric Light & Power* ,1958 Public Works Manual ,1989

Implement & Tractor Red Book ,1988 **Farm Equipment Red Book Issue** ,1990

This Enthralling World of Kindle Books: A Detailed Guide Revealing the Benefits of Kindle Books: A Realm of Ease and Versatility Kindle books, with their inherent portability and simplicity of availability, have liberated readers from the constraints of physical books. Done are the days of carrying cumbersome novels or carefully searching for specific titles in bookstores. E-book devices, sleek and portable, seamlessly store an wide library of books, allowing readers to immerse in their preferred reads anytime, everywhere. Whether traveling on a busy train, relaxing on a sun-kissed beach, or simply cozying up in bed, Kindle books provide an exceptional level of ease. A Reading World Unfolded: Discovering the Vast Array of E-book Allis Chalmers 6060 Manual Allis Chalmers 6060 Manual The Kindle Shop, a virtual treasure trove of bookish gems, boasts an extensive collection of books spanning varied genres, catering to every readers preference and preference. From gripping fiction and mind-stimulating non-fiction to classic classics and modern bestsellers, the Kindle Shop offers an exceptional variety of titles to discover. Whether looking for escape through immersive tales of fantasy and exploration, delving into the depths of historical narratives, or broadening ones understanding with insightful works of science and philosophy, the Kindle Shop provides a gateway to a literary universe brimming with endless possibilities. A Revolutionary Force in the Literary Landscape: The Lasting Impact of Kindle Books Allis Chalmers 6060 Manual The advent of Kindle books has certainly reshaped the literary scene, introducing a model shift in the way books are published, disseminated, and consumed. Traditional publication houses have embraced the digital revolution, adapting their approaches to accommodate the growing demand for e-books. This has led to a rise in the availability of Kindle titles, ensuring that readers have entry to a vast array of literary works at their fingers. Moreover, E-book books have equalized entry to literature, breaking down geographical barriers and offering readers worldwide with equal opportunities to engage with the written word. Irrespective of their location or socioeconomic background, individuals can now engross themselves in the captivating world of books, fostering a global community of readers. Conclusion: Embracing the Kindle Experience Allis Chalmers 6060 Manual E-book books Allis Chalmers 6060 Manual, with their inherent convenience, flexibility, and wide array of titles, have certainly transformed the way we experience literature. They offer readers the freedom to explore the limitless realm of written expression, anytime, anywhere. As we continue to navigate the ever-evolving online landscape, Kindle books stand as testament to the lasting power of storytelling, ensuring that the joy of reading remains accessible to all.

https://legacy.tortoisemedia.com/book/publication/fetch.php/12%20Civic%20Service%20Schedule.pdf

Table of Contents Allis Chalmers 6060 Manual

1. Understanding the eBook Allis Chalmers 6060 Manual
    - The Rise of Digital Reading Allis Chalmers 6060 Manual
    - Advantages of eBooks Over Traditional Books
2. Identifying Allis Chalmers 6060 Manual
    - Exploring Different Genres
    - Considering Fiction vs. Non-Fiction
    - Determining Your Reading Goals
3. Choosing the Right eBook Platform
    - Popular eBook Platforms
    - Features to Look for in an Allis Chalmers 6060 Manual
    - User-Friendly Interface
4. Exploring eBook Recommendations from Allis Chalmers 6060 Manual
    - Personalized Recommendations
    - Allis Chalmers 6060 Manual User Reviews and Ratings
    - Allis Chalmers 6060 Manual and Bestseller Lists
5. Accessing Allis Chalmers 6060 Manual Free and Paid eBooks
    - Allis Chalmers 6060 Manual Public Domain eBooks
    - Allis Chalmers 6060 Manual eBook Subscription Services
    - Allis Chalmers 6060 Manual Budget-Friendly Options
6. Navigating Allis Chalmers 6060 Manual eBook Formats
    - ePub, PDF, MOBI, and More
    - Allis Chalmers 6060 Manual Compatibility with Devices
    - Allis Chalmers 6060 Manual Enhanced eBook Features
7. Enhancing Your Reading Experience
    - Adjustable Fonts and Text Sizes of Allis Chalmers 6060 Manual
    - Highlighting and Note-Taking Allis Chalmers 6060 Manual
    - Interactive Elements Allis Chalmers 6060 Manual
8. Staying Engaged with Allis Chalmers 6060 Manual

    - Joining Online Reading Communities
    - Participating in Virtual Book Clubs
    - Following Authors and Publishers Allis Chalmers 6060 Manual
9. Balancing eBooks and Physical Books Allis Chalmers 6060 Manual
    - Benefits of a Digital Library
    - Creating a Diverse Reading Collection Allis Chalmers 6060 Manual
10. Overcoming Reading Challenges
    - Dealing with Digital Eye Strain
    - Minimizing Distractions
    - Managing Screen Time
11. Cultivating a Reading Routine Allis Chalmers 6060 Manual
    - Setting Reading Goals Allis Chalmers 6060 Manual
    - Carving Out Dedicated Reading Time
12. Sourcing Reliable Information of Allis Chalmers 6060 Manual
    - Fact-Checking eBook Content of Allis Chalmers 6060 Manual
    - Distinguishing Credible Sources
13. Promoting Lifelong Learning
    - Utilizing eBooks for Skill Development
    - Exploring Educational eBooks
14. Embracing eBook Trends
    - Integration of Multimedia Elements
    - Interactive and Gamified eBooks

Allis Chalmers 6060 Manual Introduction

Allis Chalmers 6060 Manual Offers over 60,000 free eBooks, including many classics that are in the public domain. Open Library: Provides access to over 1 million free eBooks, including classic literature and contemporary works. Allis Chalmers 6060 Manual Offers a vast collection of books, some of which are available for free as PDF downloads, particularly older books in the public domain. Allis Chalmers 6060 Manual : This website hosts a vast collection of scientific articles, books, and textbooks. While it operates in a legal gray area due to copyright issues, its a popular resource for finding various publications. Internet Archive for Allis Chalmers 6060 Manual : Has an extensive collection of digital content, including

books, articles, videos, and more. It has a massive library of free downloadable books. Free-eBooks Allis Chalmers 6060 Manual Offers a diverse range of free eBooks across various genres. Allis Chalmers 6060 Manual Focuses mainly on educational books, textbooks, and business books. It offers free PDF downloads for educational purposes. Allis Chalmers 6060 Manual Provides a large selection of free eBooks in different genres, which are available for download in various formats, including PDF. Finding specific Allis Chalmers 6060 Manual, especially related to Allis Chalmers 6060 Manual, might be challenging as theyre often artistic creations rather than practical blueprints. However, you can explore the following steps to search for or create your own Online Searches: Look for websites, forums, or blogs dedicated to Allis Chalmers 6060 Manual, Sometimes enthusiasts share their designs or concepts in PDF format. Books and Magazines Some Allis Chalmers 6060 Manual books or magazines might include. Look for these in online stores or libraries. Remember that while Allis Chalmers 6060 Manual, sharing copyrighted material without permission is not legal. Always ensure youre either creating your own or obtaining them from legitimate sources that allow sharing and downloading. Library Check if your local library offers eBook lending services. Many libraries have digital catalogs where you can borrow Allis Chalmers 6060 Manual eBooks for free, including popular titles.Online Retailers: Websites like Amazon, Google Books, or Apple Books often sell eBooks. Sometimes, authors or publishers offer promotions or free periods for certain books.Authors Website Occasionally, authors provide excerpts or short stories for free on their websites. While this might not be the Allis Chalmers 6060 Manual full book , it can give you a taste of the authors writing style.Subscription Services Platforms like Kindle Unlimited or Scribd offer subscription-based access to a wide range of Allis Chalmers 6060 Manual eBooks, including some popular titles.

FAQs About Allis Chalmers 6060 Manual Books

How do I know which eBook platform is the best for me? Finding the best eBook platform depends on your reading preferences and device compatibility. Research different platforms, read user reviews, and explore their features before making a choice. Are free eBooks of good quality? Yes, many reputable platforms offer high-quality free eBooks, including classics and public domain works. However, make sure to verify the source to ensure the eBook credibility. Can I read eBooks without an eReader? Absolutely! Most eBook platforms offer webbased readers or mobile apps that allow you to read eBooks on your computer, tablet, or smartphone. How do I avoid digital eye strain while reading eBooks? To prevent digital eye strain, take regular breaks, adjust the font size and background color, and ensure proper lighting while reading eBooks. What the advantage of interactive eBooks? Interactive eBooks incorporate multimedia elements, quizzes, and activities, enhancing the reader engagement and providing a more immersive learning experience. Allis Chalmers 6060 Manual is one of the best book in our library for free trial. We provide copy of Allis Chalmers 6060 Manual in digital format, so the

resources that you find are reliable. There are also many Ebooks of related with Allis Chalmers 6060 Manual. Where to download Allis Chalmers 6060 Manual online for free? Are you looking for Allis Chalmers 6060 Manual PDF? This is definitely going to save you time and cash in something you should think about. If you trying to find then search around for online. Without a doubt there are numerous these available and many of them have the freedom. However without doubt you receive whatever you purchase. An alternate way to get ideas is always to check another Allis Chalmers 6060 Manual. This method for see exactly what may be included and adopt these ideas to your book. This site will almost certainly help you save time and effort, money and stress. If you are looking for free books then you really should consider finding to assist you try this. Several of Allis Chalmers 6060 Manual are for sale to free while some are payable. If you arent sure if the books you would like to download works with for usage along with your computer, it is possible to download free trials. The free guides make it easy for someone to free access online library for download books to your device. You can get free download on free trial for lots of books categories. Our library is the biggest of these that have literally hundreds of thousands of different products categories represented. You will also see that there are specific sites catered to different product types or categories, brands or niches related with Allis Chalmers 6060 Manual. So depending on what exactly you are searching, you will be able to choose e books to suit your own need. Need to access completely for Campbell Biology Seventh Edition book? Access Ebook without any digging. And by having access to our ebook online or by storing it on your computer, you have convenient answers with Allis Chalmers 6060 Manual To get started finding Allis Chalmers 6060 Manual, you are right to find our website which has a comprehensive collection of books online. Our library is the biggest of these that have literally hundreds of thousands of different products represented. You will also see that there are specific sites catered to different categories or niches related with Allis Chalmers 6060 Manual So depending on what exactly you are searching, you will be able tochoose ebook to suit your own need. Thank you for reading Allis Chalmers 6060 Manual. Maybe you have knowledge that, people have search numerous times for their favorite readings like this Allis Chalmers 6060 Manual, but end up in harmful downloads. Rather than reading a good book with a cup of coffee in the afternoon, instead they juggled with some harmful bugs inside their laptop. Allis Chalmers 6060 Manual is available in our book collection an online access to it is set as public so you can download it instantly. Our digital library spans in multiple locations, allowing you to get the most less latency time to download any of our books like this one. Merely said, Allis Chalmers 6060 Manual is universally compatible with any devices to read.

Find Allis Chalmers 6060 Manual :

2012 civic service schedule
~~2012 ford focus hatchback maintenance schedules~~

2012 ap art history multiple choice answers
2012 cven20assignment unsw
2012 kia optima user manual
2012 subaru forester factory repair manual
2012 ford e250 wiring diagram
2012 kia sorento 3 5l service repair manual
2012 audi q7 cargo net manual
2012 mercedes benz c class c250 coupe owners manual
2012 jeep liberty limited owners manual
2012 milady study guide the essential companion answer key 25200
2012 mazda 5 owners manual
2012 johnson 50 hp outboard
2012 volkswagen eos owners manual

Allis Chalmers 6060 Manual :

amazon co uk emoji stickers - Jan 25 2023
web emoji stickers 36 sheets smile emoticons stickers for notebook phone laptop decoration and as reward for children total 1980 stickers 70 730 0 20 count get it wednesday 27 sept free delivery by amazon only 1 left in stock 400 set whatsapp iphone laptop emoji emoticon smiley face stickers genuine 132 319 get it
des stickers emoji gratuites ainsi que des stickers 1 672 flaticon - Mar 27 2023
web téléchargez des stickers emoji gratuites pour whatsapp instagram facebook et appareils mobiles découvrez notre collection de magnifiques stickers emoji disponibles aux formats svg et png flaticon stickers courrier facebook téléphone
emoji stickers etsy - Apr 27 2023
web check out our emoji stickers selection for the very best in unique or custom handmade pieces from our stickers shops
meme stickers for discord whatsapp discord emoji - Jul 19 2022
web how to find and use meme discord stickers first search our meme stickers and find the perfect sticker for your discord server then download the image of the meme sticker using the download button and navigate to your discord servers settings page under the stickers tab you should see the option to upload stickers drag and drop the meme
amazon com emoji face stickers - Oct 22 2022
web 1 48 of 278 results for emoji face stickers results 24pack make a face sticker emoji stickers for kids your own face craft

reward diy birthday party supply 89 100 bought in past month 799 0 33 count free delivery fri sep 29 on 25 of items shipped by amazon or fastest delivery thu sep 28

amazon in emoji stickers - Aug 20 2022

web 1 48 of over 1 000 results for emoji stickers results price and other details may vary based on product size and colour gs 10 sheets smiley emoji face expressions funny art n craft self adhesive stickers 1 100 bought in past month 108 m r p 399 73 off 5 off coupon details get it by monday 23 october free delivery

amazon com emoji stickers - Jul 31 2023

web emoji sticker pack 1750 real die cut emoji stickers 35 sheets of stickers 50 stickers per sheet includes all emojis as seen on iphone latest update includes 2023 emojis pvc vinyl material peel and stick anywhere 1 1599 0 01 count free delivery wed nov 1 or fastest delivery wed oct 25

get emoji all emojis to copy and paste - Sep 01 2023

web copy and paste emoji no apps required emojis are supported on ios android macos windows linux and chromeos copy and paste emojis for twitter facebook slack instagram snapchat slack github instagram whatsapp and more

free emoji stickers 1 672 stickers svg png flaticon - Oct 02 2023

web download free emoji stickers for whatsapp instagram facebook and mobile devices discover our collection of aesthetic emoji stickers available in svg png flaticon stickers mail facebook phone

discord stickers discord emoji - Jun 29 2023

web currently browsing stickers for discord whatsapp recent pridethrower xiter fi 124 isle welcome xiter fi 160 pride catboy xiter fi 13 pride dog xiter fi 49 pride cat xiter fi 161 animated touch some grass xiter fi 180 doge coin purple edition xiter fi 125 doge xiter fi 96 spookcord xiter fi 110 pycord xiter fi 63 bored

gifs on giphy be animated - Jun 17 2022

web all the gifs giphy is the platform that animates your world find the gifs clips and stickers that make your conversations more positive more expressive and more you

emoji sticker gifs get the best gif on giphy - May 17 2022

web explore and share the best emoji sticker gifs and most popular animated gifs here on giphy find funny gifs cute gifs reaction gifs and more

discord stickers - Apr 15 2022

web thousands of discord stickers to bring life to your community milk and mocha crypto pepe cute anime animated meme flag discord stickers explore the latest discord stickers silly little guy by balsak12 36620 dbzpowerup by molly crolly me when no pancaek by leianeneakikinnie shut up by shaaif10 smurf cat by funkydome official s mini with soap

use memoji on your iphone or ipad pro apple support - Nov 22 2022
web sep 9 2022 here s how to create a memoji sticker create your memoji open the keyboard then tap the memoji stickers button select the sticker that you want to send tap the send button memoji stickers aren t supported on ipad air 2
stickers for facebook free facebook stickers stickees com - Feb 11 2022
web welcome to stickees com this site is an ever expanding collection of stickers for use on facebook and various social networking sites or in your emails sms messages and more
sticker emojis for discord slack discord emoji - Sep 20 2022
web stickers pfps themes maker creators discord bot login or signup popular search queries pepe cat heart halloween star valorant discord arrow genshin crown admin cute dog mod sanrio love blox fruits black no duck cross numbers meme funny blue ghost pokemon verified kek nsfw shrug moon owner bunny sad featured creators
emoticonos para copiar y pegar emoji copiar pegar - Mar 15 2022
web emoticonos para copiar y pegar copiar aquí estan presentados los emojis actuales de whatsapp facebook instagram vk y otros servicios los emoticones de emoji se clasifican en grupos podéis usarlos en cualquier dispositivo ios android o windows copiad el símbolo con la selección habitual o haced clic sobre él y pulsad en el botón
emoji stickers images free download on freepik - May 29 2023
web find download free graphic resources for emoji stickers 92 000 vectors stock photos psd files free for commercial use high quality images freepik
stickers de emoji gratuitos 1 796 stickers svg png flaticon - Feb 23 2023
web descarga stickers gratis de emoji para whatsapp instagram facebook y dispositivos móviles descubre nuestra colección de stickers de emoji disponibles en svg png flaticon stickers correo facebook teléfono
ai sticker maker studio 12 app store - Dec 24 2022
web sep 28 2023 more halloween stickers get into the halloween spirit with our new spooky sticker collection improved emoji maker we ve optimized and expanded the emoji maker making it even more user friendly and content rich bug fixes we ve improved performance and fixed some issues for a smoother experience
wwf endangered species conservation world wildlife fund - Jun 02 2023
web news coverage of wwf and resources for members of the media including press releases world wildlife fund the leading organization in wildlife conservation and endangered species learn how you can help wwf make a difference
animal pictures and facts national geographic - May 01 2023
web animal pictures and facts learn all you wanted to know about animals with pictures videos facts news and more composite photograph by joel sartore national geographic photo ark

wildlife in singapore national parks board - Dec 28 2022
web collection of wild animals for trade will lead to ecosystem imbalance and threaten the survival of endangered species welfare of animal compromised unsuitable living conditions poor diet and pet owner s lack of knowledge of the proper care for the animal may affect animal s welfare singapore s biodiversity affected

species protecting wildlife world wildlife fund - Feb 27 2023
web we protect wildlife because they inspire us but we also focus our efforts on those species like tigers rhinos whales and marine turtles whose protection influences and supports the survival of other species or offers the opportunity to protect whole landscapes or marine areas marine animals sea turtle humphead wrasse pacific salmon

wildlife in singapore 10 wild animals you can expect to find - Aug 04 2023
web 10th january 2023 by expat living 5 min read welcome to singapore and welcome to its wildlife this might be the third most densely populated country in the world yet some beautiful and bizarre creatures call the island home here we take a look at the most interesting and elusive of them

animals national geographic kids - Jan 29 2023
web weird but true animals weird but true animals ad subscribe ad subscribe video series awesome 8 awesome 8 amazing animals amazing animals animal showdown animal showdown what sam sees what sam sees animal lol animal lol animal close ups animal close ups games arctic fox snowboarding action and adventure

animals national geographic - Sep 05 2023
web the best animal stories delivered to your inbox enjoy timely meaningful news designed to entertain and educate you about our wild kin plus updates from national geographic and the walt disney

wildlife wikipedia - Jul 03 2023
web wildlife refers to undomesticated animal species but has come to include all organisms that grow or live wild in an area without being introduced by humans 1 wildlife was also synonymous to game those birds and mammals that were hunted for sport wildlife can be found in all ecosystems

top 10 wild animals in the world earth and world - Oct 06 2023
web may 2 2019 thus here comes the rundown of the main 10 most hazardous wild animals in the world wild animals 1 african lion lions are viewed as the rulers of the wilderness and in all respects which is all well and good the african lion has staggering velocity well sharpened sharp paws and teeth to assault a conceivable prey

nat geo wild youtube - Mar 31 2023
web national geographic wild is a place for all things animals and for animal lovers alike take a journey through the animal kingdom with us and discover things

wasser opulenter bildband über die gewaltige kraft der natur die - Sep 25 2023
web wasser opulenter bildband über die gewaltige kraft der natur die erde von oben luftbilder von meeren küsten seen flüssen gletschern wolken natur fotografie fundiertes geologie fachwissen edmaier bernhard jung
oliver schopf politische karikatur ukraine hochexplosive lage - Jul 11 2022
web homepage des politischen karikaturisten zeichners und illustrator oliver schopf werkschau über 500 karikaturen und illustrationen sowie gerichtszeichnungen
wasser opulenter bildband uber die gewaltige kraf pdf free - Sep 13 2022
web wasser opulenter bildband uber die gewaltige kraf pdf introduction wasser opulenter bildband uber die gewaltige kraf pdf free earthsong bernhard edmaier 2008 04 02 a breathtaking collection of aerial photographs of the earth s surface this title celebrates the natural beauty of the earth and emphasizes the shrinking natural
wasser opulenter bildband uber die gewaltige kraf pdf - Dec 16 2022
web jul 11 2023 wasser opulenter bildband uber die gewaltige kraf 1 1 downloaded from uniport edu ng on july 11 2023 by guest wasser opulenter bildband uber die gewaltige kraf if you ally craving such a referred wasser opulenter bildband uber die gewaltige kraf ebook that will have enough money you worth get the entirely best seller from us
wasser opulenter bildband uber die gewaltige kraf howard b - Jan 17 2023
web as this wasser opulenter bildband uber die gewaltige kraf it ends happening being one of the favored ebook wasser opulenter bildband uber die gewaltige kraf collections that we have this is why you remain in the best website to look the amazing book to have hito steyerl i will survive hito steyerl 2021 05 04
wasser opulenter bildband über die gewaltige kraft der natur die - Jul 23 2023
web wasser eine entdeckungsreise der bildband über das may 27th 2020 wasser opulenter bildband über die gewaltige kraft der natur die erde von oben luftbilder von meeren küsten seen flüssen gletschern wolken natur fotografie amp fundiertes geologie fachwissen bernhard edmaier 5 0 von 5 sternen 2 gebundene ausgabe 29 99
wasser opulenter bildband über die gewaltige kraft der natur die - Aug 24 2023
web june 2nd 2020 wasser opulenter bildband über die gewaltige kraft der natur die erde von oben luftbilder von meeren küsten seen flüssen gletschern wolken natur fotografie amp fundiertes geologie fachwissen bernhard edmaier 5 0 von 5 sternen 2 gebundene ausgabe 29 99 die kraft des wassers wie wasser informationen speichert
wasser opulenter bildband uber die gewaltige kraf pdf - Feb 06 2022
web wasser opulenter bildband uber die gewaltige kraf downloaded from autoconfig ablogtowatch com by guest ernesto cohen deutsche litteraturzeitung stiftung warentest the latest book by the award winning photographer bernhard edmaier presents his stunning vistas of water in awe inspiring views of our planet in his seminal

wasser opulenter bildband über die gewaltige kraft der - Jun 22 2023
web oct 26 2015 wasser opulenter bildband über die gewaltige kraft der natur die erde von oben luftbilder von meeren küsten seen flüssen gletschern wolken natur fotografie fundiertes geologie fachwissen by bernhard edmaier goodreads jump to ratings and reviews want to read buy on amazon rate this book
wasser opulenter bildband über die gewaltige kraft der natur die - Mar 19 2023
web wasser opulenter bildband über die gewaltige kraft der natur die erde von oben luftbilder von meeren küsten seen flüssen gletschern wolken natur fotografie fundiertes geologie fachwissen by bernhard edmaier angelika jung hüttl wasserkraft die geheime macht des wassers die botschaft des
wasser opulenter bildband uber die gewaltige kraf download - Feb 18 2023
web wasser opulenter bildband uber die gewaltige kraf downloaded from lgscout com by guest choi harrison börsenblatt twentysix begleitband zur grossen ausstellung im herbst 2012 im antikenmuseum basel und sammlung ludwig tausende besuchen taglich die ruinen von petra in der jordanischen wuste die wenigsten wissen jedoch etwas
wasser opulenter bildband uber die gewaltige kraf - Aug 12 2022
web apr 24 2023 gewaltige kraf and numerous books collections from fictions to scientific research in any way accompanied by them is this wasser opulenter bildband uber die gewaltige kraf that can be your partner in her footsteps lonely planet 2020 02 01
wasser opulenter bildband uber die gewaltige kraf pdf - Apr 20 2023
web wasser opulenter bildband uber die gewaltige kraf literatur inter und transmedial inter and transmedial literature feb 03 2022 literatur oder allgemeiner texte sind nicht erst seit dem 20 jahrhundert inter und transmedial ausgerichtet dennoch ist es sinnvoll von einer medial reflexiven literatur erst
angriffe in der ost ukraine das große problem ist man hat nicht - May 09 2022
web apr 19 2022 angriffe in der ost ukraine das große problem ist man hat nicht genügend schwere waffen
wasser opulenter bildband über die gewaltige kraft der natur die - Oct 14 2022
web versandkostenfrei wasser opulenter bildband über die gewaltige kraft der wasser entdeckung des blauen planeten de eisl 10 fakten über wasser bernhard edmaier wasser prestel verlag hardcover referat zu die kraft des wassers kostenloser download äußere kräfte gestalter der oberfläche wissen de die geheime macht
bild lagezentrum ukraine zerstört größten mörser der welt - Mar 07 2022
web may 24 2022 im osten der ukraine hat russland am wochenende mit der 2s4 tulpan den schwersten mörser der welt eingesetzt doch ein propagandavideo mit dem 28 tonne
wasser opulenter bildband über die gewaltige kraft der natur die - Nov 15 2022

web projekt wasser kraft schüler und die vielfältige kraft so funktioniert ein wasserkraftwerk energieinitiative wasserkraft duden wasserkraft rechtschreibung bedeutung 10 fakten über wasser bernhard edmaier angelika jung hüttl wasser presse wasser opulenter bildband über die gewaltige kraft der die geheime macht des wassers die

er sprang bei angriff ins wasser bild fand den ukrainer der - Apr 08 2022

web jun 30 2022 01 06 quelle twitter a shekh0vts0v telegram v zelenskiy official reuters 29 06 2022 sie wussten es ist ernst auf dem video ist zu sehen wie vad richtung wasser rennt über den zaun

mann wird von riesiger welle weggespült und überlebt web de - Jun 10 2022

web ein spaziergänger ist vergangene woche an der küste in kalifornien von einer massiven welle mitgerissen und ins wasser gespült worden glücklicherweise konnte der mann gerettet werden

wasser opulenter bildband über die gewaltige kraft der natur die - May 21 2023

web wasser opulenter bildband über die gewaltige kraft der natur die erde von oben luftbilder von meeren küsten seen flüssen gletschern wolken natur fotografie fundiertes geologie fachwissen by bernhard edmaier angelika jung hüttl