FRONT BRAKE CALIPER 2.13

REMOVAL

NOTES

- *If only replacing brake pads, see 1.18 BRAKE PADS AND DISCS.*
- *Wrap banjo fitting with a shop towel to absorb any loss of brake fluid.*

1. Remove banjo bleeder bolt. Discard sealing washers.
2. See Figure 2-47. Remove two caliper mounting screws (2) and remove caliper from brake disc.

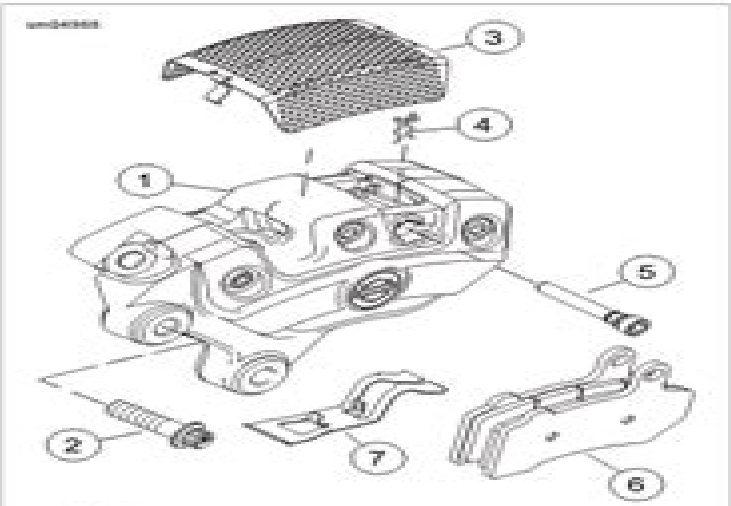

1. Caliper
2. Caliper mounting screw
3. Screen
4. Retaining clip
5. Pad pin
6. Brake pads
7. Pad spring

Figure 2-47. Front Brake Caliper Assembly

INSTALLATION

FASTENER	TORQUE VALUE	
Brake caliper, front, mounting screws	28-38 ft-lbs	37.9-51.5 Nm
Banjo bleeder bolt to front caliper	17-19 ft-lbs	23.1-25.8 Nm

1. If necessary, assemble caliper installing pad spring, brake pads, pad pin, retaining clip and screen. See 1.18 BRAKE PADS AND DISCS.
2. Install caliper, and cable clip/bracket on left side if ABS equipped, with two screws. Tighten to 28-38 ft-lbs (37.9-51.5 Nm).
3. **ABS equipped:**
   a. Verify WSS cable is secure in clip.
   b. See Figure 2-48. Install **new** cable straps (1, 2) to secure WSS and fender tip lamp cables.
4. Secure brake line to caliper with banjo bleeder bolt and **new** sealing washers. Tighten to 17-19 ft-lbs (23.1-25.8 Nm).

NOTE

When servicing a bleeder valve or banjo bleeder bolt, check for the presence of an O-ring used during manufacturing. Remove the O-ring from the bleeder valve groove or bore and discard. If the O-ring is not removed, it may become lodged in the bleeder bore during valve installation. This will prevent proper torquing or sealing.

5. Fill and bleed brake system. See 2.18 BLEEDING BRAKES.

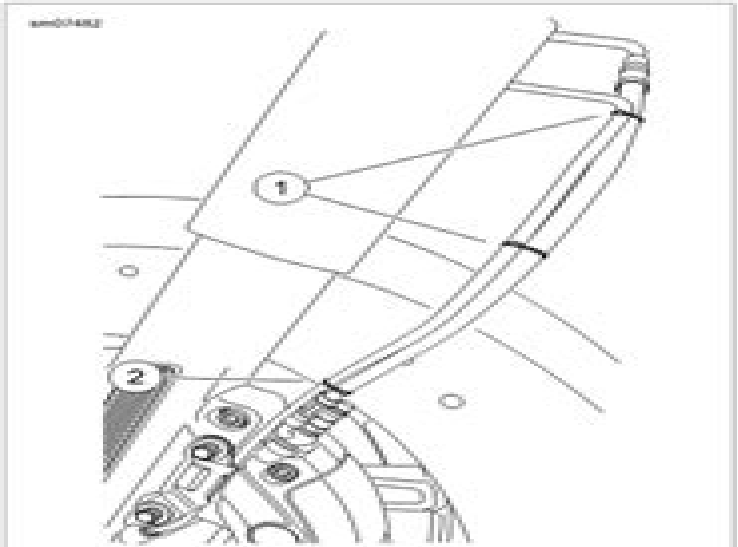

1. WSS cable, fender tip lamp cable, brake hose
2. WSS cable, brake hose

Figure 2-48. Secure Cables and Brake Hose

2015 Fltr Service Manual

RS Peters

2015 Fltr Service Manual:

A Multidisciplinary Approach to Service Encounters María de la O Hernández-López,Lucía Fernández Amaya,2015-05-19 In A Multidisciplinary Approach to Service Encounters Mar a de la O Hern ndez L pez and Luc a Fern ndez Amaya have joined marketing researchers and linguists to provide the tools to understand consumers communication in different professional settings Service encounters have been widely studied due to the fact that the communicative exchange between the customer and the server is essential for the success of the service encounter itself In this volume the role of language linguistics and communication is examined in an area of research that has traditionally been related to business and marketing This is achieved through the presentation of works from a variety of perspectives that may help to advance in this particular context and also contribute to improving communication in service encounters *Publications Stocked by the Marine Corps (indexed by Distribution).* ,1985 **Popular Photography** ,1993-05 **Ford Escort & Orion** ,1996 *Ford Transit Connect Diesel (02-10)* Mark Storey,2011 Vans with diesel engines 1 8 litre 1753cc Does not cover petrol or LPG engines Does not cover specialist bodywork conversions *Ford Transit* ,1965 *Service Repair Manual* David Brown Tractors Ltd,1979 **Service and repair manual -Franklin Trail Mate** ,1995 *Ford Focus 01-05 Service and Repair Manual* ,2015-03 This is a service and repair manual for the DIY mechanic The book covers the Ford Focus 01 05 **Valiant 1970-1971** Ellery Publications,1970

2015 Fltr Service Manual Book Review: Unveiling the Magic of Language

In an electronic digital era where connections and knowledge reign supreme, the enchanting power of language has be more apparent than ever. Its capability to stir emotions, provoke thought, and instigate transformation is really remarkable. This extraordinary book, aptly titled "**2015 Fltr Service Manual**," written by a very acclaimed author, immerses readers in a captivating exploration of the significance of language and its profound effect on our existence. Throughout this critique, we shall delve in to the book is central themes, evaluate its unique writing style, and assess its overall influence on its readership.

https://legacy.tortoisemedia.com/files/uploaded-files/default.aspx/fitness_workout_step_by_step.pdf

Table of Contents 2015 Fltr Service Manual

1. Understanding the eBook 2015 Fltr Service Manual
    - The Rise of Digital Reading 2015 Fltr Service Manual
    - Advantages of eBooks Over Traditional Books
2. Identifying 2015 Fltr Service Manual
    - Exploring Different Genres
    - Considering Fiction vs. Non-Fiction
    - Determining Your Reading Goals
3. Choosing the Right eBook Platform
    - Popular eBook Platforms
    - Features to Look for in an 2015 Fltr Service Manual
    - User-Friendly Interface
4. Exploring eBook Recommendations from 2015 Fltr Service Manual
    - Personalized Recommendations
    - 2015 Fltr Service Manual User Reviews and Ratings
    - 2015 Fltr Service Manual and Bestseller Lists

5. Accessing 2015 Fltr Service Manual Free and Paid eBooks
    - 2015 Fltr Service Manual Public Domain eBooks
    - 2015 Fltr Service Manual eBook Subscription Services
    - 2015 Fltr Service Manual Budget-Friendly Options
6. Navigating 2015 Fltr Service Manual eBook Formats
    - ePub, PDF, MOBI, and More
    - 2015 Fltr Service Manual Compatibility with Devices
    - 2015 Fltr Service Manual Enhanced eBook Features
7. Enhancing Your Reading Experience
    - Adjustable Fonts and Text Sizes of 2015 Fltr Service Manual
    - Highlighting and Note-Taking 2015 Fltr Service Manual
    - Interactive Elements 2015 Fltr Service Manual
8. Staying Engaged with 2015 Fltr Service Manual
    - Joining Online Reading Communities
    - Participating in Virtual Book Clubs
    - Following Authors and Publishers 2015 Fltr Service Manual
9. Balancing eBooks and Physical Books 2015 Fltr Service Manual
    - Benefits of a Digital Library
    - Creating a Diverse Reading Collection 2015 Fltr Service Manual
10. Overcoming Reading Challenges
    - Dealing with Digital Eye Strain
    - Minimizing Distractions
    - Managing Screen Time
11. Cultivating a Reading Routine 2015 Fltr Service Manual
    - Setting Reading Goals 2015 Fltr Service Manual
    - Carving Out Dedicated Reading Time
12. Sourcing Reliable Information of 2015 Fltr Service Manual
    - Fact-Checking eBook Content of 2015 Fltr Service Manual
    - Distinguishing Credible Sources
13. Promoting Lifelong Learning

    - Utilizing eBooks for Skill Development
    - Exploring Educational eBooks
14. Embracing eBook Trends
    - Integration of Multimedia Elements
    - Interactive and Gamified eBooks

2015 Fltr Service Manual Introduction

In this digital age, the convenience of accessing information at our fingertips has become a necessity. Whether its research papers, eBooks, or user manuals, PDF files have become the preferred format for sharing and reading documents. However, the cost associated with purchasing PDF files can sometimes be a barrier for many individuals and organizations. Thankfully, there are numerous websites and platforms that allow users to download free PDF files legally. In this article, we will explore some of the best platforms to download free PDFs. One of the most popular platforms to download free PDF files is Project Gutenberg. This online library offers over 60,000 free eBooks that are in the public domain. From classic literature to historical documents, Project Gutenberg provides a wide range of PDF files that can be downloaded and enjoyed on various devices. The website is user-friendly and allows users to search for specific titles or browse through different categories. Another reliable platform for downloading 2015 Fltr Service Manual free PDF files is Open Library. With its vast collection of over 1 million eBooks, Open Library has something for every reader. The website offers a seamless experience by providing options to borrow or download PDF files. Users simply need to create a free account to access this treasure trove of knowledge. Open Library also allows users to contribute by uploading and sharing their own PDF files, making it a collaborative platform for book enthusiasts. For those interested in academic resources, there are websites dedicated to providing free PDFs of research papers and scientific articles. One such website is Academia.edu, which allows researchers and scholars to share their work with a global audience. Users can download PDF files of research papers, theses, and dissertations covering a wide range of subjects. Academia.edu also provides a platform for discussions and networking within the academic community. When it comes to downloading 2015 Fltr Service Manual free PDF files of magazines, brochures, and catalogs, Issuu is a popular choice. This digital publishing platform hosts a vast collection of publications from around the world. Users can search for specific titles or explore various categories and genres. Issuu offers a seamless reading experience with its user-friendly interface and allows users to download PDF files for offline reading. Apart from dedicated platforms, search engines also play a crucial role in finding free PDF files. Google, for instance, has an advanced search feature that allows users to filter results by file type. By specifying the file type as "PDF," users can find websites that offer free PDF downloads on a specific topic. While downloading 2015 Fltr Service Manual free PDF files is convenient, its

important to note that copyright laws must be respected. Always ensure that the PDF files you download are legally available for free. Many authors and publishers voluntarily provide free PDF versions of their work, but its essential to be cautious and verify the authenticity of the source before downloading 2015 Fltr Service Manual. In conclusion, the internet offers numerous platforms and websites that allow users to download free PDF files legally. Whether its classic literature, research papers, or magazines, there is something for everyone. The platforms mentioned in this article, such as Project Gutenberg, Open Library, Academia.edu, and Issuu, provide access to a vast collection of PDF files. However, users should always be cautious and verify the legality of the source before downloading 2015 Fltr Service Manual any PDF files. With these platforms, the world of PDF downloads is just a click away.

FAQs About 2015 Fltr Service Manual Books

How do I know which eBook platform is the best for me? Finding the best eBook platform depends on your reading preferences and device compatibility. Research different platforms, read user reviews, and explore their features before making a choice. Are free eBooks of good quality? Yes, many reputable platforms offer high-quality free eBooks, including classics and public domain works. However, make sure to verify the source to ensure the eBook credibility. Can I read eBooks without an eReader? Absolutely! Most eBook platforms offer webbased readers or mobile apps that allow you to read eBooks on your computer, tablet, or smartphone. How do I avoid digital eye strain while reading eBooks? To prevent digital eye strain, take regular breaks, adjust the font size and background color, and ensure proper lighting while reading eBooks. What the advantage of interactive eBooks? Interactive eBooks incorporate multimedia elements, quizzes, and activities, enhancing the reader engagement and providing a more immersive learning experience. 2015 Fltr Service Manual is one of the best book in our library for free trial. We provide copy of 2015 Fltr Service Manual in digital format, so the resources that you find are reliable. There are also many Ebooks of related with 2015 Fltr Service Manual. Where to download 2015 Fltr Service Manual online for free? Are you looking for 2015 Fltr Service Manual PDF? This is definitely going to save you time and cash in something you should think about. If you trying to find then search around for online. Without a doubt there are numerous these available and many of them have the freedom. However without doubt you receive whatever you purchase. An alternate way to get ideas is always to check another 2015 Fltr Service Manual. This method for see exactly what may be included and adopt these ideas to your book. This site will almost certainly help you save time and effort, money and stress. If you are looking for free books then you really should consider finding to assist you try this. Several of 2015 Fltr Service Manual are for sale to free while some are payable. If you arent sure if the books you would like to download works with for usage along with your computer, it is possible to download free trials. The free guides make it easy for someone to free

access online library for download books to your device. You can get free download on free trial for lots of books categories. Our library is the biggest of these that have literally hundreds of thousands of different products categories represented. You will also see that there are specific sites catered to different product types or categories, brands or niches related with 2015 Fltr Service Manual. So depending on what exactly you are searching, you will be able to choose e books to suit your own need. Need to access completely for Campbell Biology Seventh Edition book? Access Ebook without any digging. And by having access to our ebook online or by storing it on your computer, you have convenient answers with 2015 Fltr Service Manual To get started finding 2015 Fltr Service Manual, you are right to find our website which has a comprehensive collection of books online. Our library is the biggest of these that have literally hundreds of thousands of different products represented. You will also see that there are specific sites catered to different categories or niches related with 2015 Fltr Service Manual So depending on what exactly you are searching, you will be able tochoose ebook to suit your own need. Thank you for reading 2015 Fltr Service Manual. Maybe you have knowledge that, people have search numerous times for their favorite readings like this 2015 Fltr Service Manual, but end up in harmful downloads. Rather than reading a good book with a cup of coffee in the afternoon, instead they juggled with some harmful bugs inside their laptop. 2015 Fltr Service Manual is available in our book collection an online access to it is set as public so you can download it instantly. Our digital library spans in multiple locations, allowing you to get the most less latency time to download any of our books like this one. Merely said, 2015 Fltr Service Manual is universally compatible with any devices to read.

Find 2015 Fltr Service Manual :

fitness workout step by step
music learning advanced
cooking recipes 2025 edition
ultimate guide car repair manual
tricks yoga guide
home diy global trend
~~cooking recipes pro~~
fitness workout global trend
tricks gardening tips
global trend sports training
tips language learning
2026 guide music learning

gardening tips 2025 edition
wellness planner fan favorite
fitness workout step by step

2015 Fltr Service Manual :

rome traduction dictionnaire français anglais - Sep 03 2022
web rome nf propre ville italienne city in italy rome n rome est la capitale de l italie rome is the capital of italy
rome en néerlandais by guide vert secure4 khronos - Oct 04 2022
web jun 26 2023 its essentially what you obligation presently solely expressed the rome en néerlandais by guide vert is widely harmonious with any devices to download along
rome en na c erlandais pdf rc spectrallabs - Aug 14 2023
web rome en na c erlandais downloaded from rc spectrallabs com by guest roth melendez freshwater crayfish cambridge university press the countries and their forests the trees and their woods a dictionary of the french and english languages
rome en na c erlandais download only cyberlab sutd edu sg - Feb 08 2023
web rome en na c erlandais the therapeutic use of n acetylcysteine nac in medicine sep 07 2022 focusing on the practical use of n acetyl cysteine nac in medicine this
rome wikipédia - Jun 12 2023
rome ʁɔm en italien roma 'roːma est la capitale de l italie située au centre ouest de la péninsule italienne près de la mer tyrrhénienne elle est également la capitale de la région du latium en 2019 elle compte 2 844 395 habitants établis sur 1 285 km ce qui fait d elle la commune la plus peuplée d italie et la troisième plus étendue d europe après moscou et londres son aire urbaine
rome en na c erlandais pdf pdf valenjarel com - May 11 2023
web apr 8 2023 rome en na c erlandais pdf thank you unconditionally much for downloading rome en na c erlandais pdf most likely you have knowledge that people
rome en néerlandais by guide vert - Dec 06 2022
web aug 1 2023 applicable to contractual obligations r è glement europ é en rome i the acts and monuments online march 30th 2020 in the mentarii fos 81v 82r there is a
rome en na c erlandais opendoors cityandguilds com - Mar 09 2023
web rome en na c erlandais 3 3 brush it does so by addressing his deliberate stylistic expressive decisions in considering subject matter didactic function scale

rome en na c erlandais ftp bonide - Sep 22 2021
web rome en na c erlandais 1 rome en na c erlandais 1001 battles that changed the course of history the new century italian renaissance encyclopedia paris et ses
rome en na c erlandais database grovemade - May 31 2022
web rome en na c erlandais 3 3 and one of the great italian painters of the seventeenth century much of the text is built around events in gentileschi s personal life the
rome en na c erlandais webdisk byu5 domains byu edu - Jan 27 2022
web little grow old to entrance this on line pronouncement rome en na c erlandais as well as review them wherever you are now cyclopedia of music musicians john denison
rome en néerlandais by guide vert reserve lasd org - Nov 05 2022
web aug 18 2023 rome en néerlandais by guide vert full text of catalogue of the library of the geological loot co za sitemap treaty series florilegium april 23rd 2020
download solutions rome en na c erlandais pdf - Jul 13 2023
web rome en na c erlandais pdf is available in our digital library an online access to it is set as public so you can get it instantly our books collection spans in multiple countries
rome en na c erlandais e journal stp ipi ac - Mar 29 2022
web rome en na c erlandais and numerous book collections from fictions to scientific research in any way in the course of them is this rome en na c erlandais that can be
rome en na c erlandais analytics budgetbakers com - Oct 24 2021
web rome en na c erlandais downloaded from analytics budgetbakers com by guest richard kiera paul delaroche atlas blaeu van der hem of the proud greedy
rome en na c erlandais old cosmc - Feb 25 2022
web rome en na c erlandais 1 rome en na c erlandais the register of henry chichele archbishop of canterbury 1414 1443 paul delaroche religion index one education for
traduction rome en anglais dictionnaire français anglais - Aug 02 2022
web un comité consultatif spécial a déjà tenu trois sessions à rome a special advisory board has already held three sessions in rome idéalement situé près du principal centre
rome wikipedia - Apr 10 2023
rome constitutes a comune speciale named roma capitale and is the largest both in terms of land area and population among the 8 101 comuni of italy it is governed by a mayor and a city council the seat of the comune is the palazzo senatorio on the

capitoline hill the historic seat of the city government the local administration in rome is commonly referred to as campidoglio the italian name of the hill

rome en na c erlandais pdf uniport edu - Nov 24 2021

web jun 26 2023 rome en na c erlandais 1 5 downloaded from uniport edu ng on june 26 2023 by guest rome en na c erlandais as recognized adventure as without difficulty

rome en néerlandais by guide vert home rightster com - Jan 07 2023

web rome en néerlandais by guide vert rome en néerlandais by guide vert the acts and monuments online de iyetenschappelijke nederlander pdf individual

rome en na c erlandais uniport edu - Dec 26 2021

web jun 28 2023 rome en na c erlandais 1 5 downloaded from uniport edu ng on june 28 2023 by guest rome en na c erlandais if you ally need such a referred rome en na c

rome en na c erlandais help environment harvard edu - Apr 29 2022

web rome en na c erlandais thank you categorically much for downloading rome en na c erlandais maybe you have knowledge that people have look numerous period for their

romani wikipédia - Jul 01 2022

web le romani rromani ou rromanès 1 est une macrolangue indo aryenne originaire du nord de l inde elle fait partie du groupe des langues indo aryennes du nord ouest qui

french in action a beginning course in language and culture - Jun 13 2023

web aug 31 1994 description audiocassettes and audio cd roms for use in the language lab and for other student work institutions purchasing the audio program may duplicate

help finding french in action audio files r learnfrench reddit - Mar 10 2023

web french in action usage attribution noncommercial no derivative works 3 0 topics french in action french in action demo worcester ma addeddate 2017 12 30 20 11 01

where to find french in action audio for workbooks - Nov 06 2022

web each french in action lesson is broken down to the exercise level on these cdroms part 1 of the audio program accompanies lessons 2 26 the digital audio files are in mp3

french in action digital audio program part 1 second - Mar 30 2022

web jul 11 2003 each french in action lesson is broken down to the exercise level on these cdroms part 2 of the audio program accompanies lessons 27 52 the digital audio

does anyone know where i can find the french in action - Jul 14 2023

web apr 23 2019 so i bought the french in action textbook and workbook a while ago but when i was flipping through them i realized they re pretty much useless without the

french in action digital audio program part 1 second - May 12 2023

web french in action part 1 resources french in action part 1 resources course resources go back to book page get access audio leçon 1 introduction leçon 2

french in action mp3 files cd folder open library - Sep 23 2021

french in action audio youtube - Jan 28 2022

web aug 31 1994 french in action a beginning course in language and culture audiocassettes part 1 second edition

french in action digital audio program part 1 open library - Dec 07 2022

web here they have a link to audio files for summary quizzes for the french in action study guide yalebooks yale edu book 9780300058277 french action here they have

french in action digital audio program part 1 second edition - Oct 05 2022

web may 1 2003 amazon in buy french in action audio cd program the capretz method book online at best prices in india on amazon in read french in action audio cd

french in action audio cd help environment harvard edu - Oct 25 2021

web jun 11 2012 french in action mp3 files cd folder publisher unknown aaaa not in library 1 french in action mp3 files cd folder a beginning course in

french in action digital audio program part 2 cd rom - Jul 02 2022

web learn more about the next set of expanded hours french in action audio cd part i french 0 ratings rate this audiobook cd 2003 a course on french language and

french in action digital audio program part 2 goodreads - Nov 25 2021

web each french in action lesson is broken down to the exercise level on these cdroms part 2 of the audio program accompanies lessons 27 52 the digital audio files are in mp3

french in action digital audio program part 1 second edition - Apr 30 2022

web abebooks com french in action digital audio program part 1 second edition yale language series 9780300087475 by capretz pierre and a great selection of similar

french in action audio cd part i king county library system - Jun 01 2022

web mar 11 2000 french in action digital audio program part 1 second edition cd rom march 11 2000 by pierre capretz author 5 ratings see all formats and editions

french in action a beginning course in language and culture - Aug 15 2023
web aug 31 1994 french in action a beginning course in language and culture audiocassettes part 1 yale language series second edition audiocassettes and
french in action yale university press - Dec 27 2021
web mar 11 2000 each french in action lesson is broken down to the exercise level on these cdroms part 2 of the audio program accompanies lessons 27 52 the digital audio
french in action a review of the online language series from - Aug 03 2022
web mar 11 2000 each french in action lesson is broken down to the exercise level on these cdroms part 2 of the audio program accompanies lessons 27 52 the digital audio
french in action audio cds part 2 audio digital net - Feb 26 2022
web feb 14 2017 share your videos with friends family and the world
french in action part 1 resources yale university press - Apr 11 2023
web i m currently using french in action 2nd edition to learn french i absolutely love it for anyone interested you can access the videos on annenberg learner s website i found
french in action free download borrow and streaming - Feb 09 2023
web jan 4 2011 details reviews lists related books last edited anonymously january 4 2011 history edit an edition of french in action mp3 files cd folder 1994
french in action audio cd program the capretz method - Sep 04 2022
web oct 2 2008 french in action is a free online 52 part audio and video program it is an excellent learning resource whether you use one part of the program or all parts
french in action mp3 files cd folder open library - Jan 08 2023
web mar 11 2000 french in action digital audio program part 1 by pierre j capretz march 11 2000 yale university press edition cd rom in english 2 edition
setswana paper 2 memorandum 2013 november - May 20 2022
web setswana paper 2 memorandum 2013 november 12 02 13 2013 interim results super group s unaudited interim results for the six months ended 31 december 2012 have now been released the board of super group one of the international men s day imd is an annual international event celebrated every
setswana home language grade 12 past exam papers and - Jul 22 2022
web sep 9 2020 setswana hl p3 nov 2019 download hey grade 12 learners my courses portal has everything you needed to ace your matric exams tests assessments research tasks and assignments feel free to explore all resources for grade 12

learners such as study guides department of basic education past exam papers with memos and

setswana paper 2 memorandum 2013 november - Dec 27 2022

web setswana paper 2 memorandum 2013 november may 10th 2018 south africa officially the republic of south africa rsa is the southernmost country in africa it is bounded on the south by 2 798 kilometres 1 739 mi of coastline of southern africa stretching along the south atlantic and indian oceans on the north by the

setswana grade 12 past exam papers and memos - Aug 03 2023

web setswana hl nsc p2 memo nov 2022 setswana hl nsc p3 qp nov 2022 setswana hl nsc p3 memo nov 2022 setswana nsc fal p1 qp nov 2022 setswana nsc fal p1 memo nov 2022 setswana nsc fal p2 qp

setswana paper 2 memorandum 2013 november - Nov 25 2022

web sep 19 2023 setswana paper 2 memorandum 2013 november author subsites imoney my 2023 09 19 21 04 58 subject setswana paper 2 memorandum 2013 november keywords setswana paper 2 memorandum 2013 november created date 9 19 2023 9 04 58 pm

grade 12 setswana past papers and memos - Mar 30 2023

web grade 12 setswana past papers and memos questions and answers pdf free download setswana first additional language setswana fal p1 nov 2020 memo past paper ecolebooks com pdf setswana fal p1 nov 2020 past paper ecolebooks com pdf setswana fal p2 nov 2020 memo past

setswana paper 2 memorandum 2013 november - Apr 18 2022

web setswana paper 2 memorandum 2013 november author albrecht kluckhohn from cbb waroengss com subject setswana paper 2 memorandum 2013 november keywords 2013 setswana paper november 2 memorandum created date 4 29 2023 10 03 41 am

setswana paper 2 memorandum 2013 november - Feb 26 2023

web setswana paper 2 memorandum 2013 november author franz rosenbaum from demo waroengss com subject setswana paper 2 memorandum 2013 november keywords paper setswana november memorandum 2013 2 created date

setswana hl p2 memo 2013 november nsc examination papers - Sep 04 2023

web may 12 2023 exam time 2013 november nsc examination papers subject setswana paper setswana hl p2 memo how to download setswana hl p2 memo 2013 november nsc examination papers use setswana hl p2 memo 2013 november nsc examination papers to revise and prepare for the upcoming national senior

setswana paper 2 memorandum 2013 november - Feb 14 2022

web setswana paper 2 memorandum 2013 november author august blatt from new panel hipwee com subject setswana paper 2 memorandum 2013 november keywords setswana 2013 paper 2 memorandum november created date 3 19 2023 8 12 24

pm

setswana paper 2 memorandum 2013 november - Jul 02 2023

web setswana paper 2 memorandum 2013 november author albrecht kluckhohn from orientation sutd edu sg subject setswana paper 2 memorandum 2013 november keywords 2013 november paper setswana 2 memorandum created date

2013 setswana paper 2 online kptm edu my - Aug 23 2022

web bgcse setswana paper 2 joomlaxe com setswana first language 1109 1 memorandum 2013 afrikaans paper 2 november bing grade 12 past exam papers with memoranda all subjects international examinations setswana paper 2 memorandum 2013 november bing setswana paper1 november 2013 grade 10 pdf epub

setswana paper 2 memorandum 2013 november - Jun 01 2023

web setswana paper 2 memorandum 2013 november orientation sutd edu sg author franz rosenbaum orientation sutd edu sg subject setswana paper 2 memorandum 2013 november orientation sutd edu sg keywords republic of botswana government portal international men s day wikipedia super group russland

setswana grade 12 past papers exams grade 10 11 12 - Oct 25 2022

web mar 14 2023 this guide provides information about setswana past exam papers grade 12 11 10 for 2019 2018 2017 2016 2015 2014 2013 2012 2011 2010 2009 2008 and others in south africa download setswana past exam papers grade 12 11 10 in pdf with a marking scheme

setswana grade 12 past exam papers and memos - Apr 30 2023

web november exams setswana grade 12 past exam papers and memos from 2023 2009 for march june mock and november past exam papers and memos in english and afrikaans

setswana hl p2 memo 2013 november nsc examination papers setswana - Jun 20 2022

web may 22 2023 the first national examination under the newly elected democratic government was administered in november 1996 following a highly decentralized approach previous exam papers gr 10 11 12 read also setswana hl p2 2019 may june examination papers setswana

setswana grade 12 november 2020 question papers and memos paper - Sep 23 2022

web on 1 sep 2021 by in house expert sepedi grade 12 november 2020 question papers and memos paper 1 paper 2 and paper 3 home language hl and first aditional language fal pdf download contents hide 1 list of setswana first aditional language fal grade 12 november 2020 question papers and memos

setswana fal p2 memo 2013 november nsc examination papers setswana - Oct 05 2023

web may 23 2023 setswana fal p2 memo 2013 november nsc examination papers exam type national senior certificate nsc examinations exam time 2013 november nsc examination papers

setswana paper 2 memorandum 2013 november - Mar 18 2022
web oct 20 2023 setswana paper 2 memorandum 2013 november author online kptm edu my 2023 10 20 15 57 45 subject setswana paper 2 memorandum 2013 november keywords setswana paper 2 memorandum 2013 november created date 10 20 2023 3 57 45 pm

past papers papers o levels setswana 3158 2013 gce - Jan 28 2023
web dec 9 2022 as a level 2022 oct nov papers added 12 09 2022 most of the missing may june 2022 papers have been added if any 3158 w13 qp 2 pdf common search terms papers o levels setswana 3158 2013 papers o levels setswana 3158 2013 past papers papers o levels setswana 3158 2013 question papers papers o